CATALOG CODE:

COLORS COVERED: ORANGE/M9; BLUE/E6; (RED)R8/(SILVER)C9; WHITE/WF; BLACK/BA
MARKET APPLICABLE:

F01 STEERING

NO.	CODE	DESCRIPTION	QTY	NOTES	SEASON	OLD CODE
1	40100B920003	HANDLE COMP.	1	for EPA market		40100BMBT001
2	B01591004565	BOLT 10X1.25X45MM	1			
3	B04171012555	U NUT 10X1.25MM	1			B04171012565
4	40001J4AT000	L. GRIP	1			40001BMBT000
5	40212J4AT000	GRIP ASSY.	1			40210BMBT000
6	40330B910001	CABLEASSY.THROTTLE 2	1			40330BM0T000
7	40310B920001	CABLE THROTTLE 1	1			40306BM0T000
8	40300B910002	CABLE ASSY. THROTTLE	1			40300BM0T001
9	40008BM0T000	JACKET,RR. BRAKE CABLE	1			
10	B02000501025	PAN HEAD SCREW 5X10MM	1			
11	40270BMBT000	BRAKE CABLE ASSY.	1			

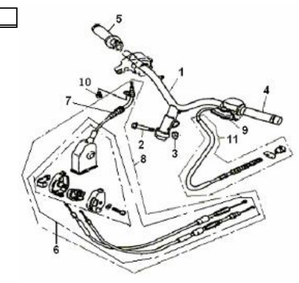

LEVER/HANDLE SWITCH, for vehicle with rear drum brake

NO.	CODE	DESCRIPTION	QTY	NOTES	SEASON	OLD CODE
1	40500BM0T000	LEFT HANDLE SWITCH ASSY.	1	for vehicle with rear drum brake		
2	40002BM0T000	LEFT LEVER	1			
3	40004BMAT000	LEVER MOUNTING SCREW	1			
4	B04000500065	NUT 5MM	1			
5	91700BMAT000	STOP SWITCH ASSY.	1			
6	40600B910002	RIGHT HANDLE SWITCH ASSY.	1	for EPA market, with rear drum brake		**40600BM0T00A**
7	40610B910002	RIGHT HANDLE SWITCH	1	for EPA market, with rear drum brake		**40610BM0T00A**
8	40620BM0T000	R. SWITCH FIXING SEAT	1	for vehicle with rear drum brake		
9	B02000502025	PAN HEAD SCREW 5X20MM	2			
10	B02000502525	PAN HEAD SCREW 5X25MM	2			
11	40510BM0T000	LEFT HANDLE SWITCH	1	for vehicle with rear drum brake		
12	40520BM0T000	L. SWITCH FIXING SEAT	1	for vehicle with rear drum brake		
13	B07000000505	SPRING WASHER 5MM	1			

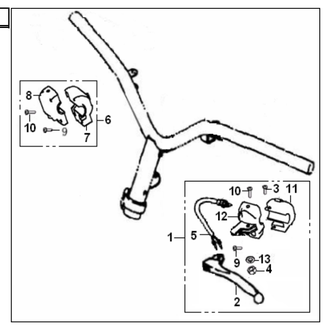

F03 FRONT FORK ASSY.

NO.	CODE	DESCRIPTION	QTY	NOTES	SEASON	OLD CODE
1	43300BMBT001	FR.R. FORK ASSY.SILVER	1	for 2007 season	2006-2007	43300BMBT000
1	43300BMBTHU1	FR.R. FORK ASSY.(GRAY)	1	Only for 2008 season	2008	
1	43300B92BA01	FR.R. FORK ASSY.BLACK	1		2009-2010	
2	43200BMBT001	FR.L. FORK ASSY.SILVER	1	for 2007 season	2006-2007	**43200BMBT000**
2	43200BMBTHU1	FR. L. FORK ASSY.(GRAY)	1	Only for 2008 season	2008	
2	43200B92BA01	FR. L. FORK ASSY.BLACK	1		2009-2010	
3	43100BMBT003	STEM, STEERING	1			**43100BM0T001**
4	43008BMAT000	NUT	2			
5	43005BMBT001	BALL RACE COVER	1			
6	43001BMBT002	BALL RACE, CONNECTING	1			
7	B06010150000	STEEL BALLφ5（A SET OF 42）	42			
8	43003BMBT000	BALL RACE	2			
9	43004BMBT000	BALL RACE	1			
10	43204BMBT001	CAP BOLT	2			
11	43150BMAT000	CLIP, SPEEDOMETER CABLE	1			
12	43290K00P000	DUST SEAL	2			
13	43207K00P000	CLIP	2			
14	43260K00P000	OIL SEAL	2			
15	B01090601265	BOLT 6X12MM	1			**B01090601260**
16	43035BMBT000	HOLDER, BRAKE HOSE 2	1			
17	43000BMBT001	FRONT FORK ASSY.SILVER	1	for 2007 season	2006-2007	
17	43000BMBTHU1	FRONT FORK ASSY.(GRAY)	1	Only for 2008 season	2008	
17	43000B92BA01	FRONT FORK ASSY.BLACK	1		2009-2010	
18	43021BM0T003	HOLDER, BRAKE HOSE 1	1			
19	B01591003065	BOLT 10X1.25X30MM	2			**B01091003065**
20	B01070601665	BOLT 6X16MM	2			

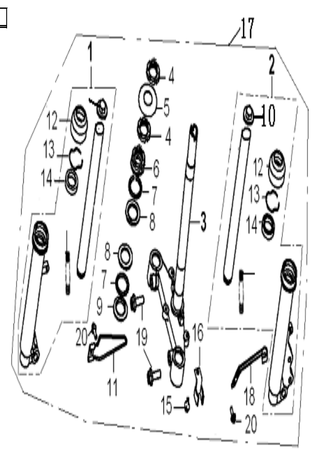

FRONT WHEEL ASSY. For vehicle with rear drum brake

NO.	CODE	DESCRIPTION	QTY	NOTES	SEASON	OLD CODE
1.1	44100BM0TENA	FR. RIM COMP. 3.5X12" (BLUE EN) ALLOY	1	for BLUE EN vehicle of 2007 season	2007	
1.1	44100BM0TBHA	FR. RIM COMP. 3.5X12" (BLACK BH) ALLOY	1	for BLACK BA & PLATINA CL vehicle of 2007 season	2007	
1.1	44100BM0TR8A	FR. RIM COMP. 3.5X12" (RED R8) ALLOY	1	for RED R8 & RED R8/WHITE W5 vehicle of 2007 season	2007	
1.1	44100B91BH2A	FR. RIM COMP. 3.5X12" (BLACK) ALLOY	1	For alloy rim, with rear drum brake	2009-2010	
2	44600BM0T910	DISTANCE COLLAR COMP.	1	For vehicle with rear drum brake		
3	44300BM0T000	OIL SEAL 22X35X7	1	For vehicle with rear drum brake		
4	B12016020100	BALL BEARING 6201-2RS	2	For vehicle with rear drum brake		
5	B140507D12AB	TIRE 120/70-12(E MARK)	1	For vehicle with rear drum brake		**B140107D12AB**
6	B1403Z201120	RIM VALVE Z2-01-1	1	For vehicle with rear drum brake		**B1403Z201100**
7	B04171212563	U NUT 12X1.25MM	1	For vehicle with rear drum brake		
8	44004G4CT000	FR.WHEEL AXLE	1	For vehicle with rear drum brake		
9	44005BM0T000	COLLAR	1	For vehicle with rear drum brake		
10	44200BM0TR80	SPEEDOMETER GEAR COMP. (45KM)/h),RED R8	1	stop supplied, please use 44200BM0TBH0	2007-2008	
10	44200BM0TEH0	SPEEDOMETER GEAR COMP.(45KM)/h), BLUE EH	1	stop supplied, please use 44200BM0TBH0	2007-2008	
10	44200J5BTR80	SPEEDOMETER GEAR COMP. (25KM/H) RED R8	1	stop supplied, please use 44200BM0TBH0	2007-2008	
10	44200BM0TEN0	SPEEDOMETER GEAR COMP.(45KM)/h),BLUE EN	1	stop supplied, please use 44200BM0TBH0	2007-2008	
10	44200BM0TBH0	SPEEDOMETER GEAR COMP. BLACK BH	1	for 45km/h vehicle	2009-2010	
11	B1404Z2011C0	CAP, VALVE	1	For vehicle with rear drum brake		

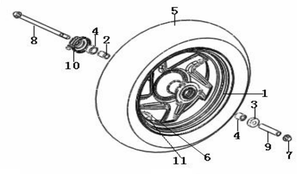

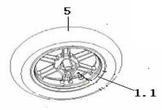

FRONT DISK BRAKE, for EPA market

NO.	CODE	DESCRIPTION	QTY	NOTES	SEASON	OLD CODE
1	45000J4FTB33	DISC BRAKE ASSY., FR.(UP AND DOWN, BLACK)	1	For EPA market	2006-	
2	45014BMBT000	BRAKE LEVER（145MM、φ14MM）	1	For EPA market	2006-	
3	45015J1CT000	LEVER MOUNTING SCREW	1	For EPA market	2006-	
4	B04160600065	NUT 6MM	1		2006-	
5	45400BMBTB30	MASTER CYLINDER COMP.(BLACK)	1		2006-	
6	45023J1DT000	MASTER CYLINDER BRACKET	1		2006-	
7	B01070602365	BOLT 6X23MM	1		2006-	
8	45200BMBT000	FR. BRAKE HOSE	1		2006-	
9	45500J4FTB30	CALIPER ASSY. (BLACK)	1	For EPA market	2006-	
10	45110J4FT000	BRAKE PAD KIT	1		2006-	
11	45300J3AT000	FRONT STOP SWITCH ASSY.	1		2006-	
12	45654BMBT000	WASHER	1	For EPA market	2006-	
13	45700BMBTB30	A.B.S(BLACK)	1	For EPA market	2006-	
14	45653BMBT000	WASHER	2	For EPA market	2006-	
15	45651BMBT000	FLANGE BOLT	1	For EPA market	2006-	
16	45039J4FT001	BOLT 8X36MM	2		2006-	**45039J4FT000**
17	45033BMBTB30	BRAKE DISC(BLACK)	1	For EPA market	2006-	
18	08001B030010	BOLT M8X20	3		2006-	**45036BMAT000**

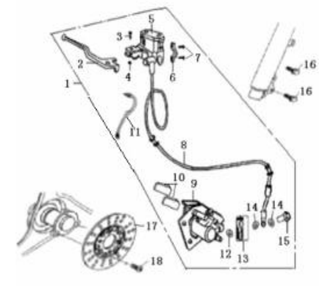

SPORTY MUFFLER (one single integrated type), for EPA & NON-EEC market, with rear drum brake

NO.	CODE	DESCRIPTION	QTY	NOTES	SEASON	OLD CODE
1	48300BM0T000	Integrated MUFFLER CANISTER ASSY. (cylindric)	1		2007-	
2	B01070601665	BOLT 6X16MM	1		2007-	
3	47100BM0T00G	Integrated type MUFFLER ASSY.COMP (with catalyzer)	1	For EPA market, with rear drum brake	2009-	
4	47490BM0T005	CUSHION	1		2007-	47490BM0T000
5	47200BM0T00G	MUFFLER ASSY.(WITH CATALYZER)	1	For EPA market, with rear drum brake	2007-	
6	B01090802065	BOLT 8X20MM	2		2007-	
7	B0109060166L	BOLT 6X16MM	2		2007-	**B01090601665**
8	47800B0DT000	GASKET, EXHAUST PIPE	1		2007-	
9	47833B2GT005	ADIABATIC RUBBER	1		2007-	
10	48831B2GT005	MUFFLER HOOP	1		2007-	
11	47006J0AP000	NUT 6MM	3		2007-	**B04070600064**

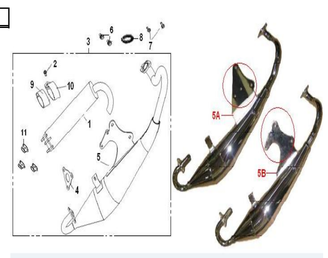

F07 AIR CLEANER

NO.	CODE	DESCRIPTION	QTY	NOTES	SEASON	OLD CODE
1	49200BMBT000	FILTER	1			
2	B05074202005	TAPPING SCREW 4.2X20MM	5			
3	B01090602065	BOLT 6X20MM	2			
4	49016BM0T000	CLIP 42.5	1			
5	49000BMBT001	AIR CLEANER ASSY.	1	For EPA，NON-EEC market		
6	49371B0DT000	GUIDE, BRAKE CABLE	1			
7	B05074201205	TAPPING SCREW 4.2X1.2MM	4			
8	B01090601265	SCREW 6×12MM	2	only for vihicle with secondary air intake system		**B01090601260**
9	57051B2GT000	PLATE,ONE WAY VALVE	1	only for vihicle with secondary air intake system		
10	49853BMMT000	HOSE II 210MM	1	only for vihicle with secondary air intake system		**49853BMBT002**
11	49852BMMT000	HOSE I 250MM	1	only for vihicle with secondary air intake system		**49852BMBT001**
12	49851BMMT002	HOSE 550MM	1	only for vihicle with secondary air intake system		**49851BMMT001**
13	49840B0ES000	ONE WAY VALVE II	1	only for vihicle with secondary air intake system		
14	49805BMBT000	SPRING Ⅱ,LOCK φ17.5	4	only for vihicle with secondary air intake system		
15	49870B2GT000	AIR CLEANER,SMALL	1	only for vihicle with secondary air intake system		
16	49855B0ES000	SPRING Ⅱ,LOCK φ16.5	2	only for vihicle with secondary air intake system		

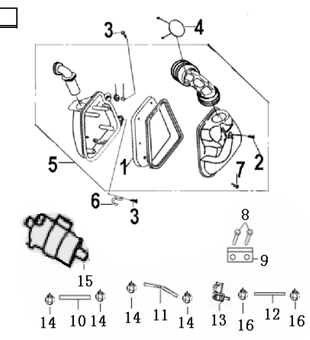

F08 FUEL TANK

NO.	CODE	DESCRIPTION	QTY	NOTES	SEASON	OLD CODE
1	50100BMBT002	FUEL TANK COMP.	1			**50100BMBT001**
2	B01090601665	BOLT 6X16MM	4			**B01090601265**
3	50300BM0T000	FUEL COCK ASSY.	1			
4	50304B470001	FUEL HOSE Ⅵø5×ø10×85 C-U-07-003	1	for USA market		
5	50316BMBT000	SPRING(BLACK)	1			
6	50307BM0T000	CLIPφ8	4			
7	50302BM0T000	VACUUM HOSE,φ4Xφ8X360	1			
8	50306BM0T000	CLIPφ7	2			
9	50301B920001	FUEL HOSE Ⅱ ø5×10×250 C-U-07-003	1	for USA market		
10	50340J0ET000	FUEL FILTER ASSY.	1			**50340BMAT000**
11	50800BMBT000	SENDER UNIT	1			
12	50801BM0T000	BOLT 5X16MM	4			**50801BM0T001**
13	50004BMBT000	SENDER UNIT GASKET	1			
14	50312J0ET000	SEAL RING	1			
15	B07020000505	WASHER 5MM	4			**B070200005005**
16	50352BM0T000	FUEL FILTER	1			
17	50391J0ET000	GASKET	1			

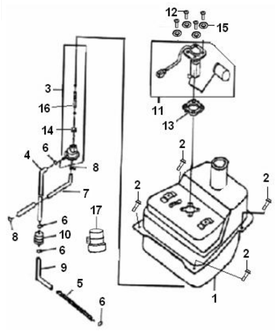

F09 SEAT

NO.	CODE	DESCRIPTION	QTY	NOTES	SEASON	OLD CODE
1	51100B92002N	SEAT ASSY.	1		2009-	
1	51100BMBT007	SEAT ASSY.(KEEWAY MARK)	1		2006-2008	
2	51080BMBT001	SEAT HINGE	1			
3	08032BM0T000	O-RING 84.4X3.1	1			
4	08011H60X000	BOLT 6X14MM	2			
5	51004BMBT001	LUGGAGE BOX	1	for all except EPA		
5	51004BMBT000	LUGGAGE BOX	1	for EPA market		
6	B07030000805	WASHER 8MM	2			
7	08017J4AT000	BOLT W/WASHER 6X20MM	2			
8	52011B33C900	RR.. CARRIER COMP (SILVER C9)	1	for red/silver R8/C9 vehicle	2009-	
8	52011BMKTBA0	RR.. CARRIER COMP (BLACK BA)	1	for black BA vehicle	2009-	
8	52011B33WF00	RR.. CARRIER COMP (WHITE WF)	1	for orange M9 & blue E6 & white WF vehicle	2009-	
8	52011BMKTBH0	RR.. CARRIER COMP (black BH)	1	for black BH vehicle	2009-	
8	52011BMKTCE0	RR.. CARRIER COMP (SILVER CE)	1	for BLUE EN vehicle	2007-2008	
8	52011BMKTCL0	RR.. CARRIER COMP (PLATINA CL)	1	for PLATINA CL vehicle	2007-2008	
8	52011BMKTR80	RR.. CARRIER COMP (RED R8)	1	for RED R8/WHITE W5 vehicle	2007-2008	
8	52011BMKTEH0	RR.. CARRIER COMP (BLUE EH)	1	for YELLOW M4/BLUE EH vehicle	2007-2008	
9	B02050804565	SCREW 8X45MM	4			
10	08027J4AT000	WASHER	2			

F10_1 REAR WHEEL, for vehicle with rear drum brake

NO.	CODE	DESCRIPTION	QTY	NOTES	SEASON	OLD CODE
1	54100B91BH2A	RR .RIMCOMP.3.5X12" (BLACK BH)ALLOY	1	For alloy rim, with rear drum brake	2009-	
1	54100BM0TBHA	RR .RIMCOMP.3.5X12" (BLACK BH) Half painted ALLOY	1	for BLACK BA & PLATINA CL vehicle / ALLOY rim / 2007 season	2007-2008	
1	54100BM0TR8A	RR .RIMCOMP.3.5X12" (RED R8) ALLOY	1	for RED R8 & RED R8/WHITE W5 vehicle / ALLOY rim / 2007 season	2007-2008	
1	54100BM0TENA	RR .RIMCOMP.3.5X12" (BLUE EN) ALLOY	1	for BLUE EN vehicle / ALLOY rim / 2007 season	2007-2008	
2	B140508D12BB	TIRE 130/70-12 (E MARK)	1	for vehicle with rear drum brake		B140108D12DB
3	B1403Z201120	RIM VALVE Z2-01-1	1	for vehicle with rear drum brake		**B1403Z201100**
4	54200BMBT000	BRAKE SHOE KIT	1	for vehicle with rear drum brake		
5	54001BMBT000	SPRING(BLACK)	2	for vehicle with rear drum brake		
6	54003BM0T000	CAM SHAFT, 2	1	for vehicle with rear drum brake		
7	54007BM0T000	CAM SHAFT LEVER	1	for vehicle with rear drum brake		54250BM0T000
8	54002BM0T000	INDICATOR PLATE	1	for vehicle with rear drum brake		
9	54008BMBT000	TENSION SPRING	1	for vehicle with rear drum brake		
10	08012BM0T000	HE×. BOLT 6×30MM (GOLD COLORED)	1	for vehicle with rear drum brake		
11	B04171615053	U NUT 16×1.5MM	1	for vehicle with rear drum brake		B04171615063
12	54027BM0T000	CAP	1	for vehicle with rear drum brake		
13	B1404Z2011C0	CAP, VALVE	1	for vehicle with rear drum brake		
14	65701BMBT000	REAR FENDER	1	for EPA& Q16-51 & Q17-15, with rear drum brake		
15	65709BM0T000	BUSH，RR，FENDER	3	for EPA& Q16-51 & Q17-15, with rear drum brake		
16	B01090602065	BOLT 6×20MM	2			
17	B01090601265	BOLT 6×12MM	2	for EPA& Q16-51 & Q17-15, with rear drum brake		**B01090601260**
18	B01090601065	BOLT 6×10MM	1	for EPA& Q16-51 & Q17-15, with rear drum brake		
19	65770BM0T000	RR，FENDER BRACKET，R	1	for EPA& Q16-51 & Q17-15, with rear drum brake		
20	B01090601665	BOLT 6×16MM	1	for EPA& Q16-51 & Q17-15, with rear drum brake		**B01090601265**
21	B190101000A0	O RING 10×1.9MM	1	for vehicle with rear drum brake		

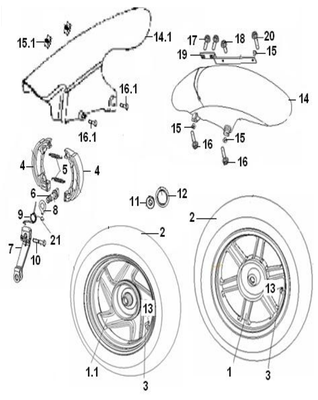

F11 FRAME BODY

NO.	CODE	DESCRIPTION	QTY	NOTES	SEASON	OLD CODE
1	57100BMBT007	FRAME COMP.	1	For EPA		
2	58303BM0T001	E/G MOUNTING BOLT,M12X1.25X280	1			**58303BM0T000**
3	B04171212565	U NUT 12X1.25MM	1			
4	58301BMBT000	E/G MOUNTING BOLT,	2			
5	B04171012555	U NUT 10X1.25MM	2			**B04171012565**
6	58360BMBT000	E/G BRKT COMP.	1			**58320BMBT000**
7	58302B0DT000	DAMPER	2			
8	58304BMBT000	SPRING	2			
9	58800BM0T000	SEAT CATCH COMP.	1			
10	B01090602565	BOLT 6X25MM	2			
11	57080BMKT000	CARRIER BRACKET	1			**57080BMBT000**
12	B01090601265	BOLT 6X12MM	5			**B01090601260**
13	58350BMAT000	BUFFER, ENGINE BRACKET	2			
14	58900BMBT000	SEAT CABLE	1			

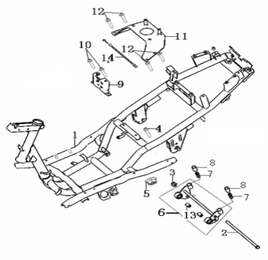

F12 REAR ABSORBER

NO.	CODE	DESCRIPTION	QTY	NOTES	SEASON	OLD CODE
1	63100BM0TEN0	RR. ABSORBER COMP.(BLUE EN)	1	for BLUE EN vehicle	2007-2008	**63100BM0TEN5**
1	63100BM0TR80	RR. ABSORBER COMP.(RED R8)	1	for RED R8 & RED R8/WHITE W5 vehicle	2007-2008	**63100BM0TR85**
1	63100BM0TBA0	RR. ABSORBER COMP.(BLACK BA)	1	for BLACK BA vehicle	2007-2008	**63100BM0TBA5**
1	63100BM0TBH0	RR. ABSORBER COMP.(BLACK BH)	1	for PLATINA CL vehicle	2007-2008	**63100BM0TBH563100BM0TB50**
1	63100BM0TM40	RR. ABSORBER COMP.(YELLOW M4)	1	for YELLOW M4/BLUE EH vehicle	2007-2008	
1	63100BM0TBH0	RR. ABSORBER COMP.（BLACK BH）	1		2009-	**63100BM0TBH563100BM0TB50**
2	63015J0ET000	FLANGE BOLT， 8X31MM	1			
3	B01141004063	BOLT.W/HOLE 10X1.25X40MM	1			
4	63016B0DT000	SPLIT PIN	1			

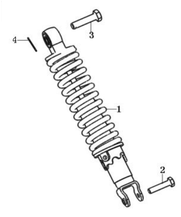

F13 FRONT FENDER

NO.	CODE	DESCRIPTION	QTY	NOTES	SEASON	OLD CODE
1	65101BMBTCE0	FRONT FENDER, (SILVER CE)	1	for BLUE EN vehicle	2007-2008	
1	65101BMBTBA0	FRONT FENDER, (BLACK BA)	1	for BLACK BA & RED R8 vehicle	2007-2008	
1	65101BMBTCL0	FRONT FENDER, (PLATINA CL)	1	for PLATINA CL vehicle	2007-2008	
1	65101BMBTR80	FRONT FENDER, (RED R8)	1	for RED R8/WHITE W5 vehicle	2007-2008	
1	65101BMBTEH0	FRONT FENDER, (BLUE EH)	1	for YELLOW M4/BLUE EH vehicle	2007-2008	
1	65101BMBTBA0	FRONT FENDER, (BLACK BA)	1	for black BA vehicle	2009-	
1	65101B92WF00	FRONT FENDER, (WHITE WF)	1	for white WF vehicle	2009-	
1	65101BMBTR80	FRONT FENDER, (RED R8)	1	for red/silver R8/C9 vehicle	2009-	
1	65101BMBTBH0	FRONT FENDER, (BLACK BH)	1	for black BH vehicle	2009-	
2	B04000500063	NUT 5MM	2			
3	66300BMBT000	REAR REFLECTOR(AMBER, DOT)	2	for EPA market		
4	65130BMBT000	FRONT FENDER BRACKET, 1	1			**65120BMBT000**
5	65140BMBT000	FRONT FENDER BRACKET, 2	1			**65110BMBT000**
6	65114BMBT000	SCREW W/WASHER M6X16	4			
7	B07030000503	WASHER 5MM	2			

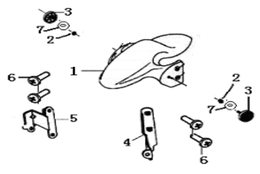

F14 HANDLE COVER

NO.	CODE	DESCRIPTION	QTY	NOTES	SEASON	OLD CODE
1	65201BMBTCE2	HANDLE COVER, 1, (SILVER CE),without sticker	1	for BLUE EN vehicle	2007-2008	
1	65201BMBTBA2	HANDLE COVER, 1, (BLACK BA),without sticker	1	for BLACK BA & RED R8 vehicle	2007-2008	
1	65201BMBTCL2	HANDLE COVER, 1, (PLATINA CL),without sticker	1	for PLATINA CL vehicle	2007-2008	
1	65201BMBTW52	HANDLE COVER, 1, (WHITE W5),without sticker	1	for RED R8/WHITE W5 vehicle	2007-2008	
1	65201BMBTM42	HANDLE COVER, 1, (YELLOW M4),without sticker	1	for YELLOW M4/BLUE EH vehicle	2007-2008	
1	65201BMBTBA2	HANDLE COVER, (BLACK BA)	1	for black BA,red/silver R8/C9,white WF vehicle, with rear drum brake	2009-	
1	65201B92BH02	HANDLE COVER, (BLACK BH)	1	for orange M9,blue E6, black BH vehicle	2009-	
2	65202BMBT000	HANDLE COVER,	1	for vehicle with rear drum brake		
3	65203BMBT000	METER VISION ASSY.	1	for black BA,red/silver R8/C9,white WF vehicle		
3	65203B92WF00	METER VISION ASSY.WHITE WF	1	for orange M9,blue E6 vehicle	2009-	
4	B05075001605	TAPPING SCREW 5X16MM	2			**B05075001600**
5	B05075001205	TAPPING SCREW 5X12MM	2			
6	B05074001205	TAPPING SCREW 4X12MM	2			**B05074001005**
7	B05074001605	TAPPING SCREW 4X16MM	2			
8	B05073001005	TAPPING SCREW 3X10MM	4			
9	B13010501405	SCREW 5X14MM	1			
10	40470BMBT000	REAR VIEW MIRROR ASSY., R(E-MARK、(BLACK))	1	for all except Canada market		**40470BMBT003**
11	40460BMBT000	REAR VIEW MIRROR ASSY., L(E-MARK、(BLACK))	1	for all except Canada market		**40460BMBT003**

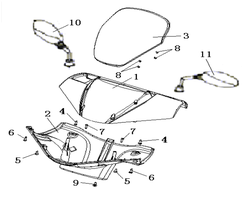

F15 FRONT COVER

NO.	CODE	DESCRIPTION	QTY	NOTES	SEASON	OLD CODE
1	65301BMBTENA	LEG SHIELD, (BLUE EN),Without stickers	1	for BLUE EN vehicle	2007-2008	
1	65301BMBTR8A	LEG SHIELD, (RED R8),Without stickers	1	for RED R8 vehicle	2007-2008	
1	65301BMBTBAA	LEG SHIELD, (BLACK BA),Without stickers	1	for BLACK BA vehicle	2007-2008	
1	65301BMBTCLA	LEG SHIELD, (PLATINA CL),Without stickers	1	for PLATINA CL vehicle	2007-2008	
1	65301BMBTW5A	LEG SHIELD, (RED/WHITE R8/W5),Without stickers	1	for RED R8/WHITE W5 vehicle	2007-2008	
1	65301BMBTM4A	LEG SHIELD, (YELLOW/BLUE M4/EH),Without stickers	1	for YELLOW M4/BLUE EH vehicle	2007-2008	
1	65301BMBTR8A	LEG SHIELD, (RED R8)	1	for red/silver R8/C9 vehicle	2009-	
1	65301B92WF0A	LEG SHIELD, (WHITE WF)	1	for white WF vehicle	2009-	
1	65301B92BA0A	LEG SHIELD, (BLACK BA)	1	usedf for black BA vehicle	2009-	
1	65301BMBTBHA	LEG SHIELD, (BLACK BH)	1	for black BH vehicle , without sticker	2009-	
2	65314BMBT000	SCREW	1			
3	08027J4AT000	PLASTIC WASHER	1			
4	B05074201605	TAPPING SCREW 4.2X16MM	4			
5	65367BMBT000	COVER，R	1			
6	65366BMBT000	COVER，L	1			
7	B05074001205	TAPPING SCREW 4X12MM	6			**B05074001005**
8	65801BMAT000	SPRING NUT 4MM	4			

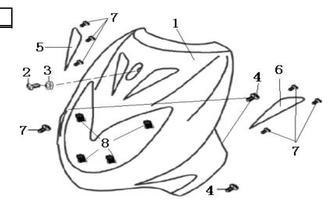

F16 LEG SHIELD

NO.	CODE	DESCRIPTION	QTY	NOTES	SEASON	OLD CODE
1	65402BMBT000	LEG SHIELD, 2	1			
2	65406BMBTBA0	UNDER COVER (BLACK BA), without stickers	1	for Blue EN, Red R8,Platina CL,Black BA vehicle	2007-2008	
2	65406BMBTR80	UNDER COVER(RED R8), without stickers	1	for RED R8/WHITE W5 vehicle	2007-2008	
2	65406BMBTEH0	UNDER COVER(BLUE EH), without stickers	1	for YELLOW M4/BLUE EH vehicle	2007-2008	
2	65406BMBTBA0	UNDER COVER(BLACK BA)	1	for black BA,red/silver R8/C9,white WF vehicle, without sticer	2009-	
2	65406BMBTBH0	UNDER COVER(BLACK BH)	1	for black BH vehicle, without stikcer	2009-	
3	65801BMAT000	SPRING NUT ST4	8			
4	B05074801605	TAPPING SCREW 4.8X16MM	8			
5	65407B920000	INNER FENDER	1			**65407BMKT000**
6	B01090603065	BOLT 6X30MM	1			
7	65403BMBT000	INSPECT COVER	1			
8	51011BMBT000	HOOK, HELMET	1			
9	B05074201605	TAPPING SCREW 4.2X16MM	8			

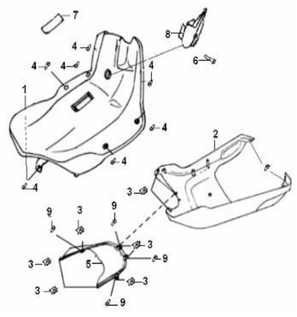

F17 FOOTREST/STAND

NO.	CODE	DESCRIPTION	QTY	NOTES	SEASON	OLD CODE
1	58520BM0T002	MAIN STAND COMP.	1	please order new MAIN STAND COMP.58520B920001 & PIN 58501B450050	2006-2008	
1	58520B920001	MAIN STAND COMP.(new, used with 58501B450050 together)	1	used after December, 2008. Start VIN TSYTABMP29B523765	2009-	**58520BM0T002**
2	58590BM0T000	PIN	1	please order new MAIN STAND COMP.58520B920001 & PIN 58501B450050	2006-2008	
2	58501B450050	PIN(new)	1	used after December, 2008. Start VIN TSYTABMP29B523765	2009-	**58590BM0T000**
3	B190101000A0	O-RING 10X1.8	1			
4	58508B0DT000	PLATE WASHER	1			
5	63016B0DT000	SPLIT PIN	1			
6	58510BM0T000	MAIN STAND SPRING ASSY.	1			
7	58507BM0T000	CUSHION, MAIN STAND	1			
8	B04020800053	NUT 8MM	1	for NON-EEC and EPA market, without Rebounding System automatically System		
9	08011B290000	BOLT, SINGLE STAND	1	for NON-EEC and EPA market, without Rebounding System automatically System,		
11	57003BM0T000	SIDE STAND SPRING	1	for NON-EEC and EPA market, without Rebounding System automatically System,		
12	58700BM0T000	SIDE STAND COMP.	1			
13	B07030000505	WASHER 5MM	4			**B07030000500**
14	B05074001605	TAPPING SCREW 4X16MM	6			
15	08011H60X000	BOLT 6X14MM	4			
16	B01090601265	BOLT 6X12MM	4			**B01090601260**
17	65802BMAT000	SPRING NUT 4.8MM	6			
18	B05075001605	TAPPING SCREW 5X16MM	1			**B05075001600**
19	65401BMBT000	FLOOR, BLACK	1			
20	65813BMBT000	BATTERY COVER	1			
21	B07030001005	WASHER 10MM	1			
22	65812BMBT000	BATTERY DAMPER II	1			
23	65811BMBT000	BATTERY DAMPER I	1			
24	65411BMBT000	FOOT PLATE, L	1			
25	65412BMBT000	FOOT PLATE, R	1			
26	B05004201305	SCREW 4.2X13MM	8			
27	57031BMBT000	WASHER	8			

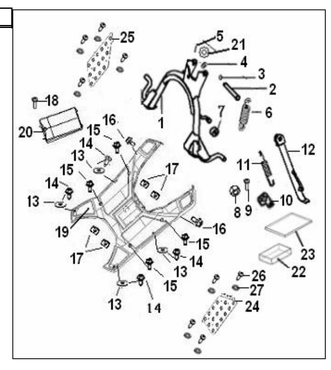

F18 SIDE COVER

NO.	CODE	DESCRIPTION	QTY	NOTES	SEASON	OLD CODE
1	65601BMBTCE0	SIDECOVER,1 (SILVER CE) , without sticker	1	for BLUE EN vehicle	2007-2008	
1	65601BMBTBA0	SIDECOVER,1 (BLACK BA), without sticker	1	for RED R8 & BLACK BA vehicle	2007-2008	
1	65601BMBTCL0	SIDECOVER,1 (PLATINA CL), without sticker	1	for PLATINA CL vehicle	2007-2008	
1	65601BMBTW50	SIDECOVER,1 (WHITE W5), without sticker	1	for RED R8/WHITE W5 vehicle	2007-2008	
1	65601BMBTEH0	SIDECOVER,1 (BLUE EH), without sticker	1	for YELLOW M4/BLUE EH vehicle	2007-2008	
1	65601B92C900	SIDECOVER,1 (SILVER C9)	1	for red/silver R8/C9 vehicle	2009-	
1	65601B92WF00	SIDECOVER,1 (WHITE WF)	1	for white WF vehicle	2009-	
1	65601BMBTBA0	SIDECOVER,1 (BLACK BA)	1	for black BA vehicle	2009-	
1	65601BMBTBH0	SIDECOVER,1 (BLACK BH)	1	for black BH vehicle，without sticker	2009-	
2	65602BMBTCE0	SIDECOVER,2 (SILVER CE), without sticker	1	for BLUE EN vehicle	2007-2008	
2	65602BMBTBA0	SIDECOVER,2 (BLACK BA), without sticker	1	for RED R8,BLACK BA vehicle	2007-2008	
2	65602BMBTCL0	SIDECOVER,2 (PLATINA CL), without sticker	1	for PLATINA CL vehicle	2007-2008	
2	65602BMBTW50	SIDECOVER,2 (WHITE W5), without sticker	1	for RED R8/WHITE W5 vehicle	2007-2008	
2	65602BMBTEH0	SIDECOVER,2 (BLUE EH), without sticker	1	for YELLOW M4/BLUE EH vehicle	2007-2008	
2	65602B92C900	SIDECOVER,2 (SILVER C9)	1	for red/silver R8/C9 vehicle	2009-	
2	65602B92WF00	SIDECOVER,2 (WHITE WF)	1	for white WF vehicle	2009-	
2	65602BMBTBA0	SIDECOVER,2 (BLACK BA)	1	for black BA vehicle	2009-	
2	65602BMBTBH0	SIDECOVER,2 (BLACK BH)	1	for black BH vehicle, without sticker	2009-	
3	65605BMBT000	SIDE COVER, 3	1	only for Q16-27 USA		**65605BMBT001**
4	65619BMBT000	SIDE COVER, 4	1			
5	65606BMBTCE0	SIDE COVER,5 (SILVER CE)	1	for BLUE EN vehicle	2007-2008	
5	65606BMBTBA0	SIDE COVER,5 (BLACK BA)	1	for RED R8,BLACK BA vehicle	2007-2008	
5	65606BMBTCL0	SIDE COVER,5 (PLATINA CL)	1	for PLATINA CL vehicle	2007-2008	
5	65606BMBTW50	SIDE COVER,5 (WHITE W5)	1	for RED R8/WHITE W5 vehicle	2007-2008	
5	65606BMBTEH0	SIDE COVER,5 (BLUE EH)	1	for YELLOW M4/BLUE EH vehicle	2007-2008	
5	65606B92C900	SIDE COVER,5 （SILVER C9)	1	for red/silver R8/C9 vehicle	2009-	
5	65606B92WF00	SIDE COVER,5 （WHITE WF)	1	for white WF vehicle	2009-	
5	65606BMBTBA0	SIDE COVER,5 （BLACK BA)	1	for black BA vehicle	2009-	
5	65606B92BH00	SIDE COVER,5 （BLACK BH)	1	for black BH vehicle	2009-	
6	B05074001205	TAPPING SCREW 4X12MM	2			**B05074001005**
7	B05074801605	TAPPING SCREW 4.8X16MM	7			
8	65802BMAT000	SPRING NUT 4.8MM	4			
9	B05075001205	TAPPING SCREW 5X12MM	4			
10	B02000602025	SCREW 6X20MM	2			
11	08021BMBT000	WASHER	2			
12	65618J00P000	RUBBER WASHER	2			
13	65709BM0T000	BUSH, RR. FENDER	2			
14	B05074801305	TAPPING SCREW 4.8X13MM	1			
15	66300BMBT001	REAR REFLECTOR(RED、DOT)	2	only for Q16-27 USA		
16	B04070600063	NUT 6MM	2	only for Q16-27 USA		

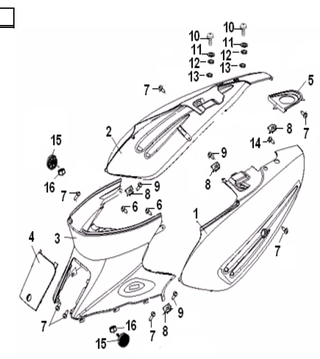

F19 OIL TANK.

NO.	CODE	DESCRIPTION	QTY	NOTES	SEASON	OLD CODE
1	64001BMAT000	OIL TANK	1			
2	64090BMAT000	OIL TANK CAP	1			
3	B01090601665	BOLT 6X16MM	2			**B01090601265**
4	64100BMAT000	OIL LEVER GAUGE ASSY.	1			
5	50307BM0T000	CLIP φ8	1			
6	64000BMAT000	OIL TANK ASSY.	1			

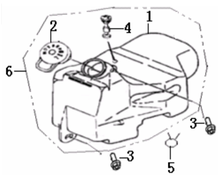

DIGITAL SPEEDOMETER ASSY.

NO.	CODE	DESCRIPTION	QTY	NOTES	SEASON	OLD CODE
1	70000B92000H	DIGITAL SPEEDOMETER COMP.	1	for vehicle since 2009.12.25		**70000BMBT017**
2	B05074001205	SCREW 4X12MM	2			**B05074001005**
3	72900BMBT000	SPEEDOMETER CABLE COMP.	1			
4	B05074001005	SCREW 4X10	1			
5	70003BMBT002	SPEEDOMETER COVER	1			
6	76000BMBT000	DIGITAL WATCH	1			
7	75000BMBT000	SPEEDOMETER WIRE ASSY	1			**75000BMBT007**
8	88900B92000X	KEY NUT (LEFT)	1			**88900BMBT001**
9	88900B92001X	KEY NUT(RIGHT)	1			**88900BMBT002**

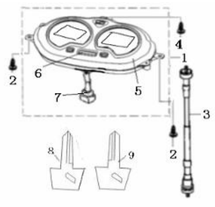

F21 FLASHER LIGHT/HEAD LIGHT.

NO.	CODE	DESCRIPTION	QTY	NOTES	SEASON	OLD CODE
1	81100BM0T002	FRONT LH INDICATOR	1	for EPA market		81100BMBT001
2	81300BM0T002	FRONT RH INDICATOR	1	for EPA market		
3	08005AE0D000	SCREW W/WASHER 5X11.5MM	2			**B13060501205**
4	80000J4AT001	HEAD LAMP ASSY.	1	for EPA market		
5	B24012120000	BULB, 12V/10W	2			**81004BMBT000**
6	B24012920000	BULB 12V-3W	2			**70001BMBT000**
7	B24010520000	BULB （12V35/35W）	2			**80002B20T000**
8	81302BM0T001	LIGHT COVER, FRONT R.	1	for EPA market		**81302BMBT001**
9	81102BM0T001	LIGHT COVER,FRONT L.	1	for EPA market		**81102BMBT001**
10	B05002902003	SCREW 2.9X20MM	2			**08011B20T000**
11	B05075016005	TAPPING SCREW 5X16MM	2			
12	B05074816005	TAPPING SCREW 4.8X16MM	2			
13	65221AE0D000	BRACKET,FRONT TURN SIGNAL	2			
14	B01090601665	SCREW M6 X16MM	2			**B01090601265**
15	B07030000605	WASHER 6MM	2			
16	B07000000605	WASHER 6MM	2			
17	B04000600055	NUT 6MM	2			
18	80102B920010	WIRE HEAD LIGHT	1			
19	81030B920000	COVER TURN SIGNAL ,ORANGE	2	for EPA market		81107BMBT000
20	80028T03010X	BASE,BULB HEAD LAMP	2			

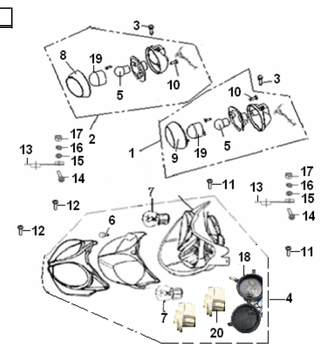

F22 TAIL LIGHT

NO.	CODE	DESCRIPTION	QTY	NOTES	SEASON	OLD CODE
1	81700BM0T002	REAR RH INDICATOR	1	for EPA market		
2	81500BM0T002	REAR LH INDICATOR	1	for EPA market		
3	81511BM0T000	FLASHER LIGHT CUSHION，L	1			
4	B07030001005	WASHER 10MM	2			
5	B04061012555	NUT 10X1.25MM	2			B04061012565
6	81708BM0T000	FLASHER LIGHT CUSHION，R	1			
7	65802BM0T000	SPRING NUT 5MM	2			
8	B04070600065	NUT 6MM	3			
9	B24012120000	BULB, 12V/10W	2			**81004BMBT000**
10	08204B920000	LICENSE BRACKET	1	for EPA market		08202BM0T000
11	82008BM0T001	INDICATOR LENS	1	for EPA market		82008BM0T000
12	82000BM0T002	TAIL LAMP 12V/P21/5W	1	for EPA market		82000BM0T000
13	08009BM0T000	SCREW 4X28MM	2			
14	82011G00P000	RUBBER WASHER	3			
15	B24013820000	BULB 12V 21/5W	1			**82005B20T000**
16	81502BM0T001	LIGHT COVER, REAR L.	1	for EPA market		**81102BM0T000**
17	81702BM0T001	LIGHT COVER, REAR R.	1	for EPA market		**81302BM0T000**
18	08011B20T000	SCREW 3X28MM	2			
19	86502BM0T001	REAR REFLECTOR BELOW TAIL LAMP	1	for EPA market		86502BM0T000
20	81030B920000	COVER TURN SIGNAL ,ORANGE	2	for EPA market		81107BM0T000
21	66300BMBT001	REAR REFLECTOR(RED、DOT)	2	for EPA market		
22	B04070600063	NUT 6MM	2	for EPA market		

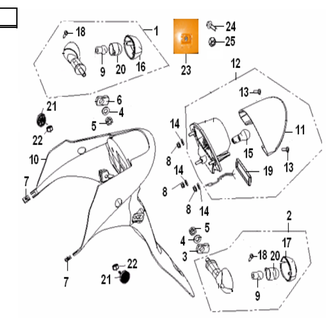

F23 ELECTRICAL EQUIPMENT I

NO.	CODE	DESCRIPTION	QTY	NOTES	SEASON	OLD CODE
1	97701BM0T000	C.D.I. UNIT COMP.	1	for NON-EEC &EPA market		97701BM0T001
2	96007BM0T000	CUSHION. C.D.I	1			
3	96200BMAT000	IGNITION COIL ASSY	1	if with engine before 2009 in EEC2 market, please order 96200B990000		
4	B02000502025	SCREW 5X20MM	1			
5	96100BM0T000	BATTERY ASSY. 12V,4AH (YTX5L-BS)	1	for vehicle with YTX5L-BS battery		**96100B030010**
5	96100B030010	BATTERY ASSY. 12V,3AH (YTX4L-BS)	1	for vehicle with YTX4L-BS battery		**96100BM0T000**
6	92000B92000R	WIRE HARNESS ASSY.	1	with waterproof socket	2006-2008	
6	92000BMBT00K	WIRE HARNESS ASSY.	1	for EPA market	2007-2008	
6	92000B920016	WIRE HARNESS ASSY.	1	for EPA market,used with new relay，start VIN 29B535624，used after 2008.12.18	2008-	**92000BMBT00K**
7	96900BMBT000	WIRE HARNESS	1			
8	96810BMAT000	FUSE 8A,250V	1			**96800BMAT000**
9	94000BMBT000	STARTER RELAY COMP.	1	please order No.9B and No.21		
9A	94100J000002	STARTER RELAY COMP.（without coupler， assembling with bolt）	1	new relay，start VIN 29B535624，used after 2008.12.18		**94000BMBT000**
9B	94100K240000	STARTER RELAY COMP.(with coupler, assembling with rubber cover)	1	94100K240000 and 92200B230002 instead of 94000BMBT000		
10	96001K00P000	BAND 8X250	3			
11	96600BMAT000	RESISTOR COMP.	1			
12	B01090601265	BOLT 6X12MM	2			**B01090601260**
13	96003K00P000	BAND 8X200	2			
14	96002K00P000	BAND 8X150	1			
15	B04000600055	NUT 6MM	1			
16	B07000000605	SPRING WASHER 6MM	2			
17	B07030000605	WASHER 6MM	2			
18	B07000000505	SPRING WASHER 5MM	1			
19	B07030000505	WASHER 5MM	1			**B07030000500**
20	96800BMAT000	FUSE COMP	1			
21	92200B230002	ELECTRIC CABLE	1			
22	B01090601065	BOLT M6×10	2			

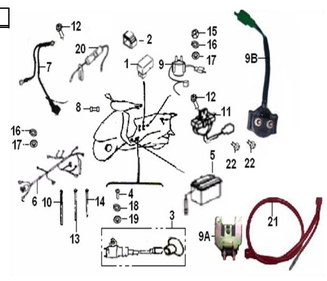

F24 ELECTRICAL EQUIPMENT

NO.	CODE	DESCRIPTION	QTY	NOTES	SEASON	OLD CODE
1	98801J0ET000	REGULATOR COMP.	1			**98801B09F000**
2	B01090601265	BOLT 6X12MM	4			**B01090601260**
3	88100BMBT00A	MAIN SWITCH ASSY.(with waterproof socket)	1	with waterproof connector	2007-2008	**88100BMBT000**
3	88100B92000Q	MAIN SWITCH ASSY.(mark on,off)	1	only for EPA market	2009-	
4	08002BMBT000	BOLT M6X12	2			
5	88000B92000K	LOCK ASSY. (with waterproof socket)	1	for All except Canada market	2007-2008	**88000BMBT00A**
5	88000B92000Q	LOCK ASSY.(mark on,off)	1	only for EPA market	2009-	
6	95000BMDT000	HORN (E MARK)	1			
7	88800BMBT000	LOCK ASSY., SEAT	1			
8	96500BM0T00B	FLASH&AUDIO PILOT COMP.	1			
9	88500BMBT000	LOCK, COVER	1			
10	88400B920000	LOCK ASSY., FUEL TANK	1			**88400BMBT000**
11	B07030000505	WASHER 5MM	2			**B07030000500**
12	B05074001005	TAPPING SCREW 4X10MM	2			
13	88101BMBT000	COVER MAIN SWITCH	1	for All except Canada market	2006-2008	
13	88101B92000Q	COVER MAIN SWITCH (mark on,off)	1	only for EPA market	2009-	
14	95701JCCT000	BAKT ALARMSYSTEM	1	for vehicles with alarm assy		
15	95730BMBT002	ALARM SYSTEM HORN	1	for vehicles with alarm assy		
16	95700BMBT002	ALARM ASSY.	1	for vehicles with alarm assy		
17	B05074801305	TAPPING SCREW 4.8X13MM	1	for vehicles with alarm assy		
19	B01090601265	BOLT 6×12MM	1	for vehicles with temperature control		**B01090601260**

ps: only Q16-05 with temperature control so far 09.01.13

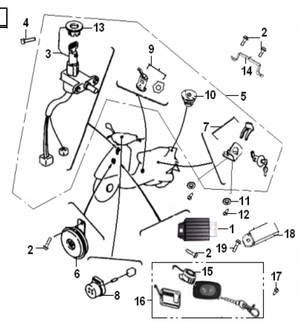

F25 TOOL KIT

NO.	CODE	DESCRIPTION	QTY	NOTES	SEASON	OLD CODE
1	02110BM0T000	TOOL BAG	1			
2	02102BM0T000	SPARK PLUG SOCKET	1			
3	02101BM0T000	SPARK PLUG SOCKET HANDLE	1			
4	02103BM0T000	SCREW DRIVER	1			
5	02104BM0T000	HANDLE	1			
6	02114BM0T000	FILTER, OIL TANK	1			
7	02115BM0T000	RR. ABSORBER ADJUSTER	1			
8	02117BMBT000	WRENCH 35	1			

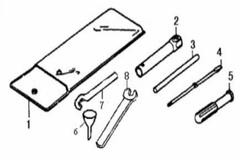

REAR BOX ASSY

NO.	CODE	DESCRIPTION	QTY	NOTES	SEASON	OLD CODE
1	52200B92BA00	BACK BOX ASSY(BLACK BA)	1	for orange M9,blue E6,red/silver R8/C9,black BA vehicle	2009-	
1	52200B92WF00	BACK BOX ASSY (WHITE/BLACK WF/BA)	1	for white WF vehicle	2009-	
1	52200BMBTEN0	BACK BOX (BLUE EN)	1	for BLUE EN vehicle	2007-2008	
1	52200BMBTR80	BACK BOX (RED R8)	1	for RED R8 & RED R8/WHITE W5 vehicle	2007-2008	
1	52200BMBTBA0	BACK BOX (BLACK BA)	1	for BLACK BA vehicle	2007-2008	
1	52200BMBTCL0	BACK BOX (PLATINA CL)	1	for PLATINA CL vehicle	2007-2008	52200BMBTCL0
1	52200BMBTEH0	BACKBOXASSY(BLUE EH)	1	for YELLOW M4/BLUE EH vehicle	2007-2008	
2	B01010603033	BOLT 6X30MM	2			
3	B01010603533	BOLT M6X35	2			
4	52221BMBT000	WASHER	4			
5	B07020000603	WASHER 6MM	4			
6	B07000000603	SPRING WASHER 6MM	4			
7	B04000600043	NUT 6MM	4			
8	88600BMBT000	BACK BOX LOCK	1			
9	B01070601663	SCREW 6X16MM	2			
10	52910BMBT000	NUT, CLIPPING 6MM	2			
11	05591BMBT000	BACK BOX COVER	1			
12	52222BMBT000	RUBBER MAT	1			
13	B01010601623	BOLT 6X16MM	4			
14	52221BMBT000	WASHER	4			
15	52180BMBT000	STORAGE BOX, ASSY PLATE	1			

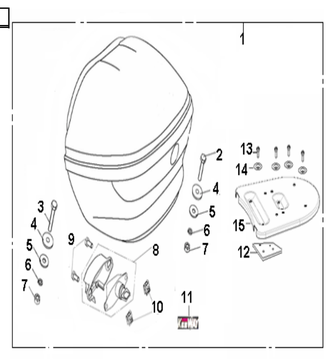

F27 ENGINE ATTACHMENT

NO.	CODE	DESCRIPTION	QTY	NOTES	SEASON	OLD CODE
1	08351BM0TC10	STARTING SHAFT(SILVER)	1	silver	2006-2007	
1	08351BM0THU0	STARTING SHAFT（SILVER GRAY）	1	silver gray	2008-	
2	B02050602565	SCREW 6X25MM	1			
3	B01070602564	BOLT 6X25MM	3			

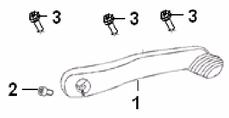

STICKER (FOR SATIN-BLACK BA VEHICLE)

NO.	CODE	DESCRIPTION	QTY	NOTES	SEASON	OLD CODE
1	05541BMBT007	STICKER LOWER FRONT COVER	2		2007-2008	
2	05519BMBTBA7	STICKER SIDE COVER,LH	1	for Black BA vehicle	2007-2008	
3	05518BMBTBA7	STICKER SIDE COVER ,RH	1	for Black BA vehicle	2007-2008	
4	05524BMBTBA2	STICKER HANDLE COVER	1	for Black BA vehicle	2007-2008	
5	05527BMBTBA7	STICKER UPPER FRONT COVER ,LH	1	for Black BA vehicle	2007-2008	
6	05528BMBTBA7	STICKER LOWER FRONT COVER,LH)	1	for Black BA vehicle	2007-2008	
7	05526BMBTBA7	STICKER UPPER FRONT COVER ,RH	1	for Black BA vehicle	2007-2008	
8	05529BMBTBA7	STICKER LOWER FRONT COVER,RH)	1	for Black BA vehicle	2007-2008	
9	05525BMBT004	STICKER	1		2007-2008	

STICKER (FOR PLATINA CL VEHICLE)

NO.	CODE	DESCRIPTION	QTY	NOTES	SEASON	OLD CODE
1	05541BMBT007	STICKER LOWER FRONT COVER,	2		2007-2008	
2	05519BMBTCL7	STICKER SIDE COVER,LH	1	for platina CL vehicle	2007-2008	
3	05518BMBTCL7	STICKER SIDE COVER ,RH	1	for platina CL vehicle	2007-2008	
4	05524BMBTCL2	STICKER HANDLE COVER	1	for platina CL vehicle	2007-2008	
5	05527BMBTCL7	STICKER UPPER FRONT COVER ,LH	1	for platina CL vehicle	2007-2008	
6	05528BMBTCL7	STICKER LOWER FRONT COVER,LH)	1	for platina CL vehicle	2007-2008	
7	05526BMBTCL7	STICKER UPPER FRONT COVER ,RH	1	for platina CL vehicle	2007-2008	
8	05529BMBTCL7	STICKER LOWER FRONT COVER,RH)	1	for platina CL vehicle	2007-2008	
9	05525BMBT004	STICKER	1		2007-2008	

STICKER (FOR BLUE EN VEHICLE)

NO.	CODE	DESCRIPTION	QTY	NOTES	SEASON	OLD CODE
1	05541BMBT007	STICKER LOWER FRONT COVER,	2		2007-2008	
2	05519BMBTEN7	STICKER SIDE COVER,LH	1	for blue EN & Red R8 vehicle	2007-2008	
3	05518BMBTEN7	STICKER SIDE COVER ,RH	1	for blue EN & Red R8 vehicle	2007-2008	
4	05524BMBTEN2	STICKER HANDLE COVER	1	for blue EN & Red R8 vehicle	2007-2008	
5	05527BMBTEN7	STICKER UPPER FRONT COVER ,LH	1	for blue EN & Red R8 vehicle	2007-2008	
6	05528BMBTEN7	STICKER LOWER FRONT COVER,LH)	1	for blue EN & Red R8 vehicle	2007-2008	
7	05526BMBTEN7	STICKER UPPER FRONT COVER ,RH	1	for blue EN & Red R8 vehicle	2007-2008	
8	05529BMBTEN7	STICKER LOWER FRONT COVER,RH)	1	for blue EN & Red R8 vehicle	2007-2008	
9	05525BMBT004	STICKER	1		2007-2008	

STICKER (FOR RED R8 VEHICLE)

NO.	CODE	DESCRIPTION	QTY	NOTES	SEASON	OLD CODE
1	05541BMBT007	STICKER LOWER FRONT COVER,	2		2007-2008	
2	05519BMBTR87	STICKER SIDE COVER,LH	1	for Red R8 vehicle	2007-2008	
3	05518BMBTR87	STICKER SIDE COVER ,RH	1	for Red R8 vehicle	2007-2008	
4	05524BMBTR82	STICKER HANDLE COVER	1	for Red R8 vehicle	2007-2008	
5	05527BMBTEN7	STICKER UPPER FRONT COVER ,LH	1	for blue EN & Red R8 vehicle	2007-2008	
6	05528BMBTEN7	STICKER LOWER FRONT COVER,LH)	1	for blue EN & Red R8 vehicle	2007-2008	
7	05526BMBTEN7	STICKER UPPER FRONT COVER ,RH	1	for blue EN & Red R8 vehicle	2007-2008	
8	05529BMBTEN7	STICKER LOWER FRONT COVER,RH)	1	for blue EN & Red R8 vehicle	2007-2008	
9	05525BMBT004	STICKER	1		2007-2008	

STICKER (FOR YELLOW/BLUE M4/EH VEHICLE)

NO.	CODE	DESCRIPTION	QTY	NOTES	SEASON	OLD CODE
1	05527BMBTM40	STICKER FRONT COVER LH. 2 (YELLOW)	1	for yellow/blue M4/EH vehicle	2007-2008	
2	05501BMBTM40	STICKER HANDLE COVER (YELLOW)	1	for yellow/blue M4/EH vehicle	2007-2008	
3	05512BMBTM40	STICKER SIDE COVER RH(YELLOW)	1	for yellow/blue M4/EH vehicle	2007-2008	
4	05511BMBTM40	STICKER SIDE COVER LH(YELLOW)	1	for yellow/blue M4/EH vehicle	2007-2008	
5	05528BMBTM40	STICKER FRONT COVER RH 1(YELLOW)	1	for yellow/blue M4/EH vehicle	2007-2008	
6	05526BMBTM40	STICKER FRONT COVER LH 1(YELLOW)	1	for yellow/blue M4/EH vehicle	2007-2008	
7	05541BMBTM40	STICKER UNDER COVER (YELLOW)	2	for yellow/blue M4/EH vehicle	2007-2008	
8	05529BMBT000	STICKER FRONT COVER	2	for yellow/blue M4/EH vehicle	2007-2008	
9	05549BMBT001	STICKER UNDER COVER RH A (YELLOW)	1	for yellow/blue M4/EH vehicle	2007-2008	
10	05548BMBT001	STICKER UNDER COVER LH A (YELLOW)	1	for yellow/blue M4/EH vehicle	2007-2008	
11	05529BMBTM40	STICKER FRONT COVER RH 2(YELLOW)	1	for yellow/blue M4/EH vehicle	2007-2008	

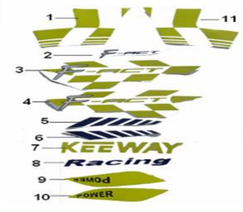

STICKER (FOR RED R8/WHITE W5 VEHICLE)

NO.	CODE	DESCRIPTION	QTY	NOTES	SEASON	OLD CODE
1	05527BMBTR80	STICKER FRONT COVER LH. 2 (RED)	1	for red/white R8/W5 vehicle	2007-2008	
2	05501BMBTR80	STICKER HANDLE COVER (RED)	1	for red/white R8/W5 vehicle	2007-2008	
3	05512BMBTR80	STICKER SIDE COVER RH(RED)	1	for red/white R8/W5 vehicle	2007-2008	
4	05511BMBTR80	STICKER SIDE COVER LH(RED)	1	for red/white R8/W5 vehicle	2007-2008	
5	05528BMBTR80	STICKER FRONT COVER RH 1(RED)	1	for red/white R8/W5 vehicle	2007-2008	
6	05526BMBTR80	STICKER FRONT COVER LH 1(RED)	1	for red/white R8/W5 vehicle	2007-2008	
7	05541BMBT007	STICKER UNDER COVER	2		2007-2008	
8	05549BMBT003	STICKER UNDER COVER RH	1	for red/white R8/W5 vehicle	2007-2008	
9	05548BMBT003	STICKER UNDER COVER LH	1	for red/white R8/W5 vehicle	2007-2008	
10	05523BMBT002	STICKER FRONT COVER LH 2	2	for red/white R8/W5 vehicle	2007-2008	
11	05529BMBTR80	STICKER FRONT COVER RH 2(RED)	1	for red/white R8/W5 vehicle	2007-2008	

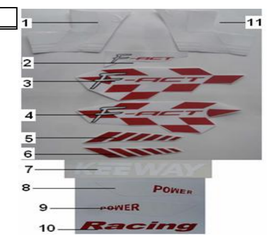

F28.3 STICKER For (RED)R8/(SILVER)C9 Fact vehicles

NO.	CODE	DESCRIPTION	QTY	NOTES	SEASON	OLD CODE
1	05501B92R80X	STICKER HANDLE COVER	1	For (RED)R8/(SILVER)C9 vehicles (Fact)	2009-	
2	05522B92R80X	STICKER FRONT COVER ,MIDDLE	1	For (RED)R8/(SILVER)C9 vehicles (Fact)	2009-	
3	05524B92R80X	STICKER FRONT COVER ,RH UPER	1	For (RED)R8/(SILVER)C9 vehicles (Fact)	2009-	
4	05526B92R80X	STICKER FRONT COVER ,RH MIDDLE	1	For (RED)R8/(SILVER)C9 vehicles (Fact)	2009-	
5	05528B92R80X	STICKER FRONT COVER,RH LOWER	1	For (RED)R8/(SILVER)C9 vehicles (Fact)	2009-	
6	05512B92R80X	STICKER SIDE COVER RH UPER	1	For (RED)R8/(SILVER)C9 vehicles (Fact)	2009-	
7	05511B92R80X	STICKER SIDE COVER LH UPER	1	For (RED)R8/(SILVER)C9 vehicles (Fact)	2009-	
8	05513B92000W	STICKER SIDE COVER LH LOWER	1	For (RED)R8/(SILVER)C9 vehicles (Fact)	2009-	
9	05543B92000W	STICKER UNDER COVER LH	1	For (RED)R8/(SILVER)C9 vehicles (Fact)	2009-	
10	05541B92R80X	STICKER UNDER COVER	2	For (RED)R8/(SILVER)C9 vehicles (Fact)	2009-	
11	05523B92R80X	STICKER FRONT COVER LH UPER	1	For (RED)R8/(SILVER)C9 vehicles (Fact)	2009-	
12	05525B92R80X	STICKER FRONT COVER LH MIDDLE	1	For (RED)R8/(SILVER)C9 vehicles (Fact)	2009-	
13	05527B92R80X	STICKER FRONT COVER LH LOWER	1	For (RED)R8/(SILVER)C9 vehicles (Fact)	2009-	
14	05514B92000W	STICKER SIDE COVER RH LOWER	1	For (RED)R8/(SILVER)C9 vehicles (Fact)	2009-	
15	05544B92000W	STICKER UNDER COVER RH	1	For (RED)R8/(SILVER)C9 vehicles (Fact)	2009-	
16	05525BMBT004	STICKER	1	For (RED)R8/(SILVER)C9 vehicles (Fact)	2009-	

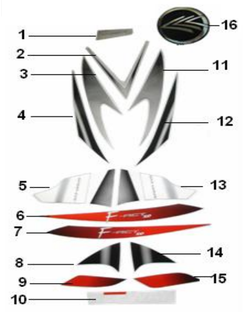

F28.4 STICKER for white WF or black BA Fact vehicle

NO.	CODE	DESCRIPTION	QTY	NOTES	SEASON	OLD CODE
1	05501B92WF0X	STICKER HANDLE COVER	1	for white WF or black BA vehicle (Fact)	2009-	
2	05522B92WF0X	STICKER FRONT COVER ,MIDDLE	1	for white WF or black BA vehicle (Fact)	2009-	
3	05524B92WF0X	STICKER FRONT COVER ,RH UPER	1	for white WF or black BA vehicle (Fact)	2009-	
4	05526B92R80X	STICKER FRONT COVER ,RH MIDDLE	1	for white WF or black BA vehicle (Fact)	2009-	
5	05528B92WF0X	STICKER FRONT COVER,RH LOWER	1	for white WF or black BA vehicle (Fact)	2009-	
6	05512B92WF0X	STICKER SIDE COVER RH UPER	1	for white WF or black BA vehicle (Fact)	2009-	
7	05511B92WF0X	STICKER SIDE COVER LH UPER	1	for white WF or black BA vehicle (Fact)	2009-	
8	05513B92000W	STICKER SIDE COVER LH LOWER	1	for white WF or black BA vehicle (Fact)	2009-	
9	05543B92000W	STICKER UNDER COVER LH	1	for white WF or black BA vehicle (Fact)	2009-	
10	05541B92R80X	STICKER UNDER COVER	2	for white WF or black BA vehicle (Fact)	2009-	
11	05523B92WF0X	STICKER FRONT COVER LH UPER	1	for white WF or black BA vehicle (Fact)	2009-	
12	05525B92R80X	STICKER FRONT COVER LH MIDDLE	1	for white WF or black BA vehicle (Fact)	2009-	
13	05527B92WF0X	STICKER FRONT COVER LH LOWER	1	for white WF or black BA vehicle (Fact)	2009-	
14	05514B92000W	STICKER SIDE COVER RH LOWER	1	for white WF or black BA vehicle (Fact)	2009-	
15	05544B92000W	STICKER UNDER COVER RH	1	for white WF or black BA vehicle (Fact)	2009-	
16	05525BMBT004	STICKER	1	for white WF or black BA vehicle (Fact)	2009-	

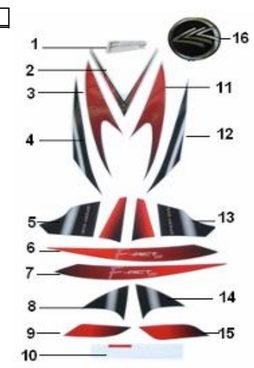

LABEL（FRAME BODY NO/ANTI-TAMPERING，PLATE）

NO.	CODE	DESCRIPTION	QTY	NOTES	SEASON	OLD CODE
1.5	57001BMBT000	FRAME BODY NO. PLATE (for U.S.A. market)	1	for U.S.A. market only	2007-2008	
2	B100432007P0	RIVET 3.2X7MM	2		2006-2008	
4	05531BMBT000	EPA STICKER (EPA 2007)	1	for EPA market, for 2007 season	2007	
4	05531B92000A	EPA STICKER (EPA 2008)	1	for EPA market, for 2008 season	2008	
5	B05073001005	RIVETM3X10	2	for EPA market	2006-2008	
6	05536BMBT001	NOISE .CONTROL,1 (DOT)	1	for EPA market, for 2007 season	2007-2008	
6	05536B920004	NOISE .CONTROL,1 (DOT)	1	for EPA market, for 2008 season	2007-2008	
7	05535BMBT000	WARNING STICKER (DOT)	1	for EPA market	2007-2008	
8	05533BMBT001	TIRE PRESSURE (DOT)	1	for EPA market	2007-2008	
9	05536BMBT002	NOISE .CONTROL,2 (DOT)	1	for EPA market, for 2007 season	2007-2008	
9	05536B920005	NOISE .CONTROL,2 (DOT)	1	for EPA market, for 2008 season	2007-2008	

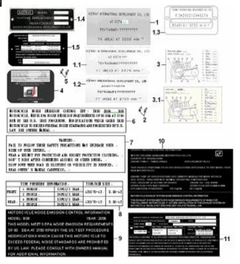

F29 STICKER
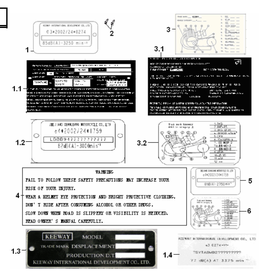
NO.	CODE	DESCRIPTION	QTY	NOTES	SEASON	OLD CODE
1.1	57001B920020	FRAME BODY NO. PLATE	1	for Q16-27 USA market 2009version	2009-	**57001BMBT017**
1.3	57001BMBT013	FRAME BODY NO.	1	For NON-EEC	2009-	
2	B100432007P0	RIVET 3.2X7MM	2		2009-	
3.1	05568B92000E	EPA STICKER	1	for EPA market 2009version	2009-	**05568BMBT006**
4	05535BMBT000	WARNING STICKER (DOT)	1	for EPA market	2009-